II-1100-MG
302-03-03 7" HINGE MORTAR GUARD INSTALLATION INSTRUCTIONS

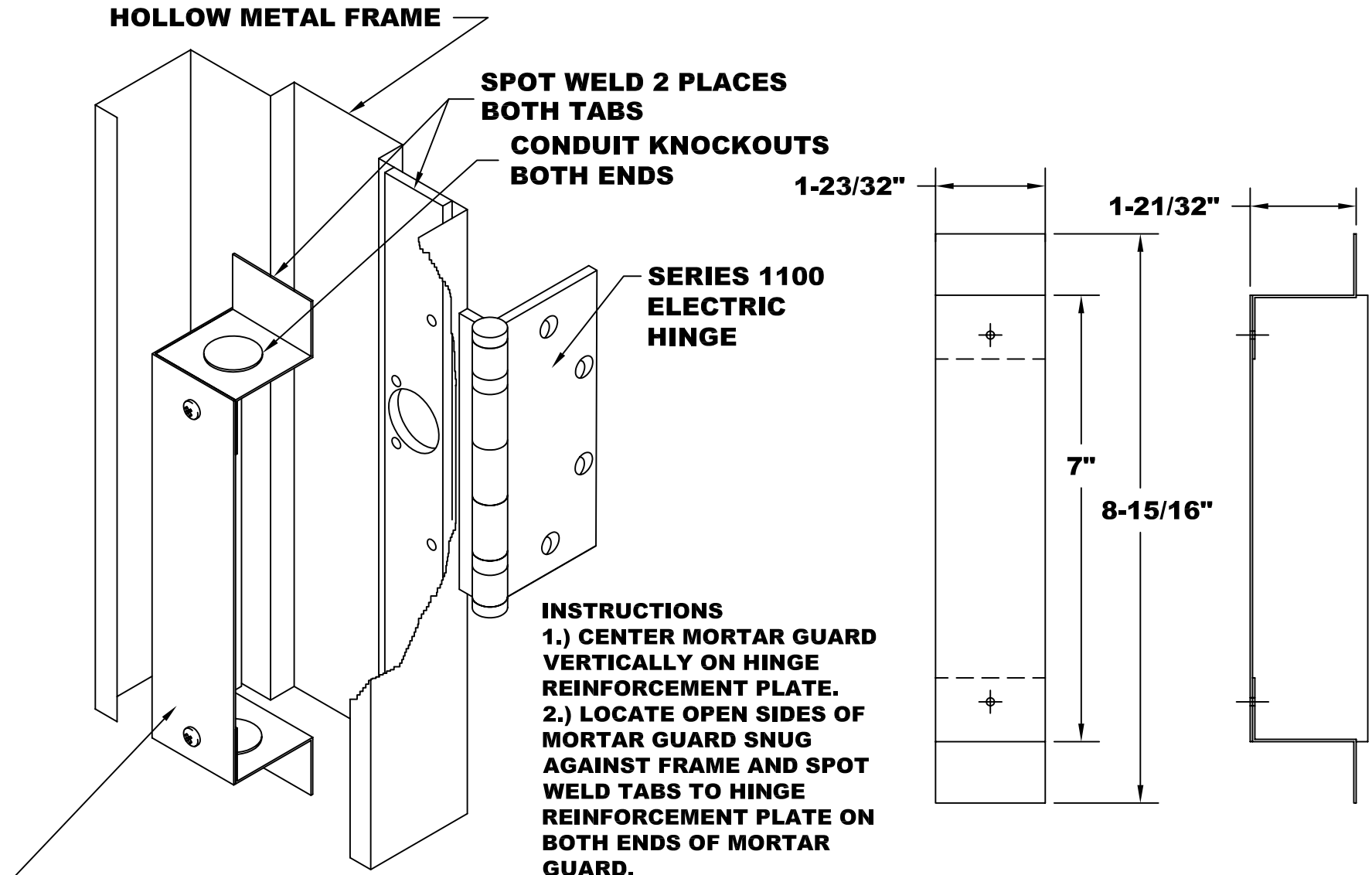

INSTRUCTIONS

1.) CENTER MORTAR GUARD VERTICALLY ON HINGE REINFORCEMENT PLATE.

2.) LOCATE OPEN SIDES OF MORTAR GUARD SNUG AGAINST FRAME AND SPOT WELD TABS TO HINGE REINFORCEMENT PLATE ON BOTH ENDS OF MORTAR GUARD.

ARCHITECTURAL CONTROL SYSTEMS, INCORPORATED

10666 GATEWAY BLVD., ST. LOUIS, MO 63132 (800) 753-5558

REV. 4/03