NetWay1 - Single Port PoE Injector for Standard Network Infrastructure

Rev. DSNetWay1_12122012

Overview

NetWay1

NetWay1 is a single port midspan PoE compliant power injector which provides power and passes data(e.g. video) for PoE compliant devices. Devices may be located up to 100m (328 ft.) from NetWay1. A NetWayXT repeater module can be utilized to extend the distance an additional 100m (328 ft.) for a total range of up to 200m (656 ft.). A maximum range of 600m (1968 ft.) is possible using multiple repeaters, based on device port requirement. NetWay1 is capable of supporting non-PoE compliant fixed IP cameras by utilizing NetWay1512 adapter.

Specifications

Input:
- 24VAC @ 1.2 amp or 24VDC @ 1.2 amp.

Data:
- One (1) PoE port provides power and passes data over ethernet (CAT5) cable up to 100m (328 ft.).
- Data rate: 10/100 Base-T compliant.

Output Power:
- Port provides up to 15.4W max.
- IEEE 802.3af compliant.
- 48VDC.
- Short circuit protection.

Functions:
- Port status LED.
- PoE manual shutdown (For UL 60950-1 applications only).
- Auto detection and protection of legacy non-PoE cameras/devices.

Electrical:
- Operating temperature: 0º C to 49º C ambient.
- 14.74 BTU/Hr.
- System AC input VA requirement: 28.8VA.

Accessories:

NetWay1512:
- 13W adapter for non-PoE compliant IP cameras.

NetWayXT:
- PoE repeater module extends range 100m (328 ft.).

Mechanical:
- Lightweight molded Acrylonitrile Butadine Styrene enclosure is RoHS compliant.
- Compact insulated housing.
- Spring terminals (input and PoE shutdown).
- Dimensions (W x L x H approx.): 2.5” (63.5mm) x 3.8” (96.52mm) x 1” (25.4mm)
- Product weight (approx.): 1.54 lbs. (0.7 kg).
- Shipping weight (approx.): 1.6 lbs. (0.73 kg).

Agency Approvals

UL/CUL Listed for Information Technology Equipment (UL 60950-1).

European Conformity

SECURITY LISTED

UL Listed for Access Control Systems (UL294).

Power over Ethernet (PoE) for Access Control (UL294B)
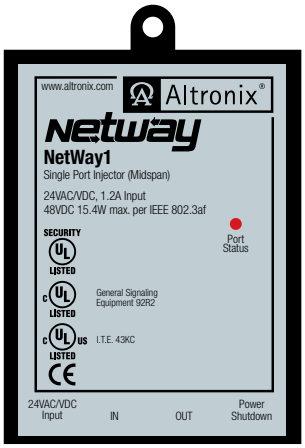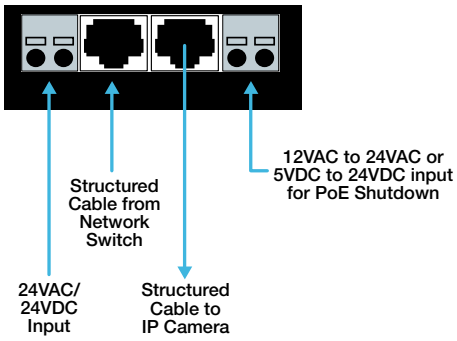
Typical Application: